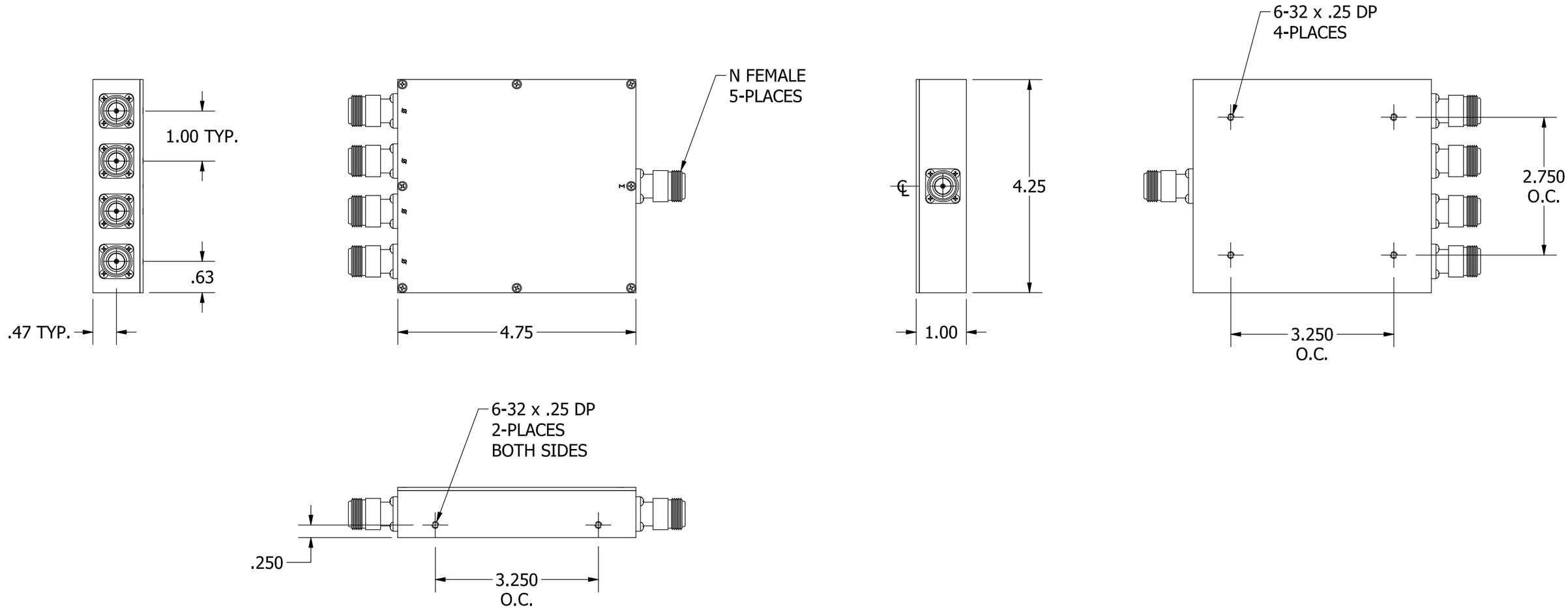

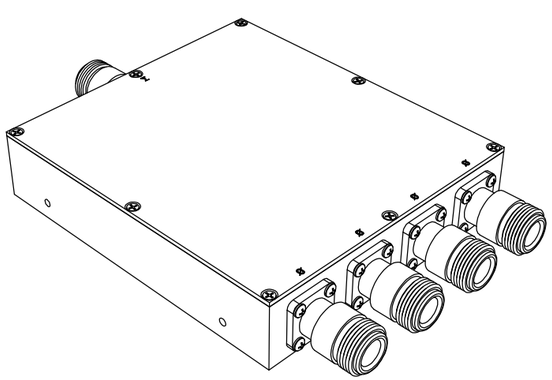

REV	ECN	DATE	BY	APPR
-	ISSUED	9-21-95	TEZ	FDW
A	4936	3-28-96	CDJ	FDW
B	5317	7-1-97	TEZ	FDW
C	5495	12-4-97	TEZ	FDW
D	12635	4-20-06	ETW	TEZ
E	24444	10-9-15	JZ	TEZ

JFW INDUSTRIES, INC.

www.jfwindustries.com PH: 317-887-1340

MATERIAL: ALUMINUM ALLOY		PROPRIETARY INFORMATION
FINISH: CHEMFILM TCP		ALL SURFACES ARE TO BE FREE OF BURRS, PITS & SCRATCHES
MODEL: 50PD-XXX	SCALE: 1/2	TOLERANCES .XX±.010 .XXX±.005 XX°±.5°
DESCRIPTION: 4 WAY POWER DIVIDER / COMBINER		DWG #: 092-2374