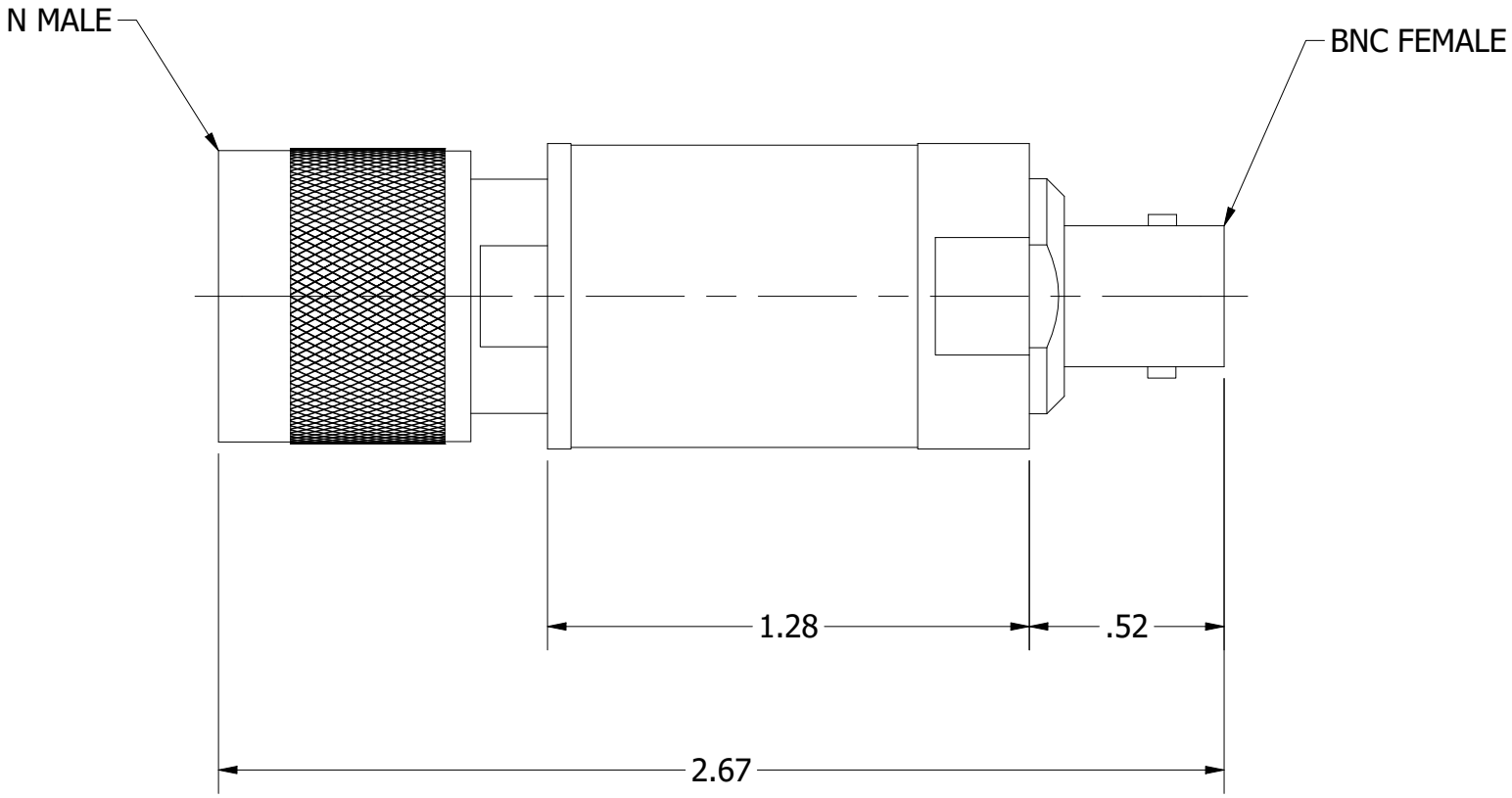

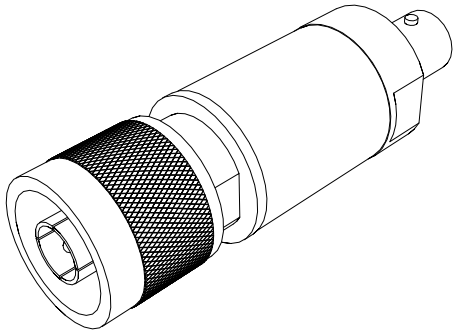

REV	ECN	DATE	BY	APPR
-	ISSUED	11-20-06	TEZ	TEZ
A	24444	9-16-19	GM	TEZ

JFW INDUSTRIES, INC.

www.jfwindustries.com PH: 317-887-1340

MATERIAL	BRASS		PROPRIETARY INFORMATION
FINISH	NICKEL		ALL SURFACES ARE TO BE FREE OF BURRS, PITS & SCRATCHES
MODEL	50D-XXX	SCALE FULL	TOLERANCES .XX±.010 .XXX±.005 XX°±.5°
DESCRIPTION	N MALE / BNC FEMALE		DWG # 092-5251