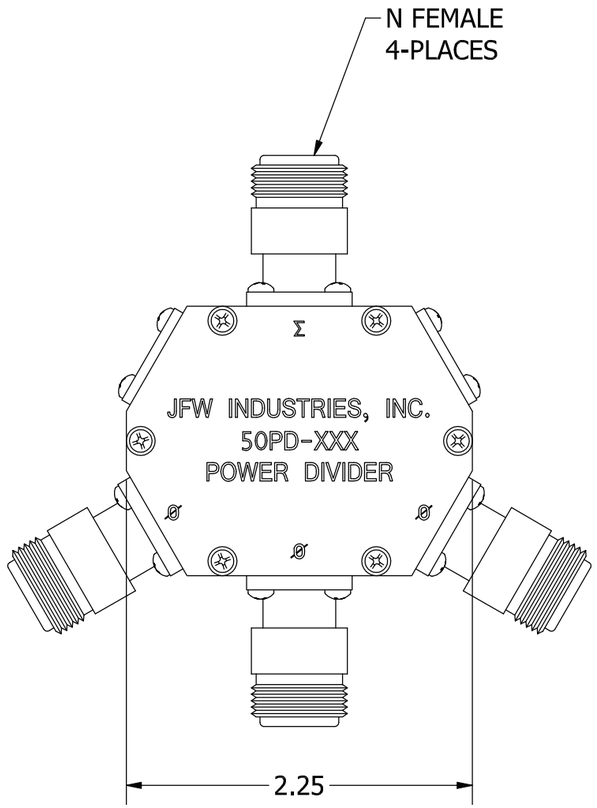

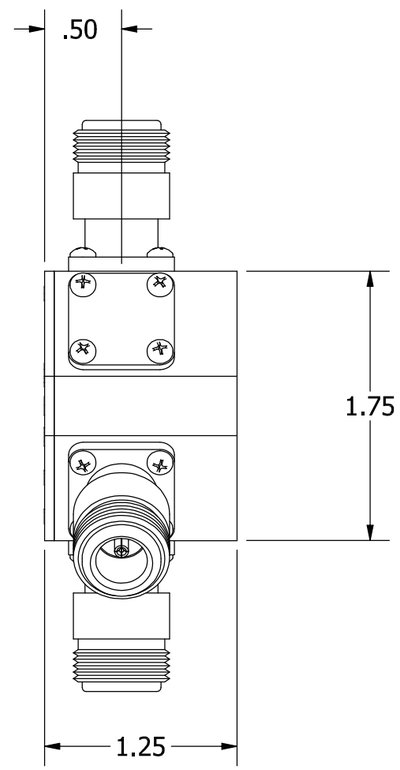

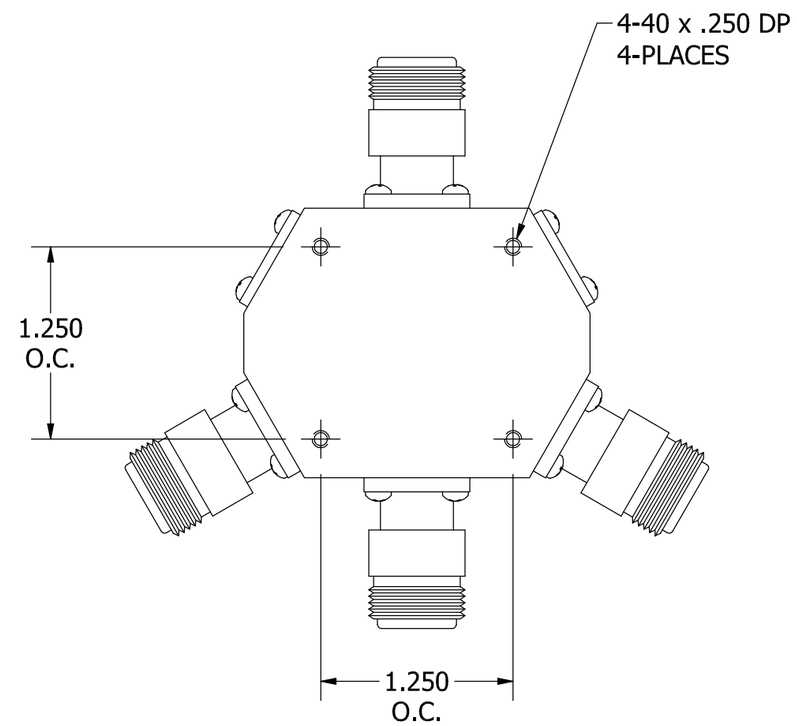

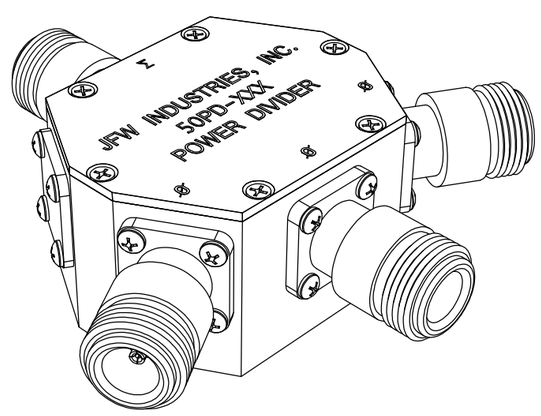

REV	ECN	DATE	BY	APPR
-	ISSUED	1-23-08	TEZ	TRS
A	24444	9-28-15	JZ	TEZ

JFW INDUSTRIES, INC.

www.jfwindustries.com PH: 317-887-1340

MATERIAL: ALUMINUM ALLOY		PROPRIETARY INFORMATION
FINISH: ELECTROLESS NICKEL		ALL SURFACES ARE TO BE FREE OF BURRS, PITS & SCRATCHES
MODEL: 50PD-XXX	SCALE: FULL	TOLERANCES .XX±.010 .XXX±.005 XX°±.5°
DESCRIPTION: 3 WAY POWER DIVIDER / COMBINER (4 TOTAL PORTS)		DWG # 092-5693