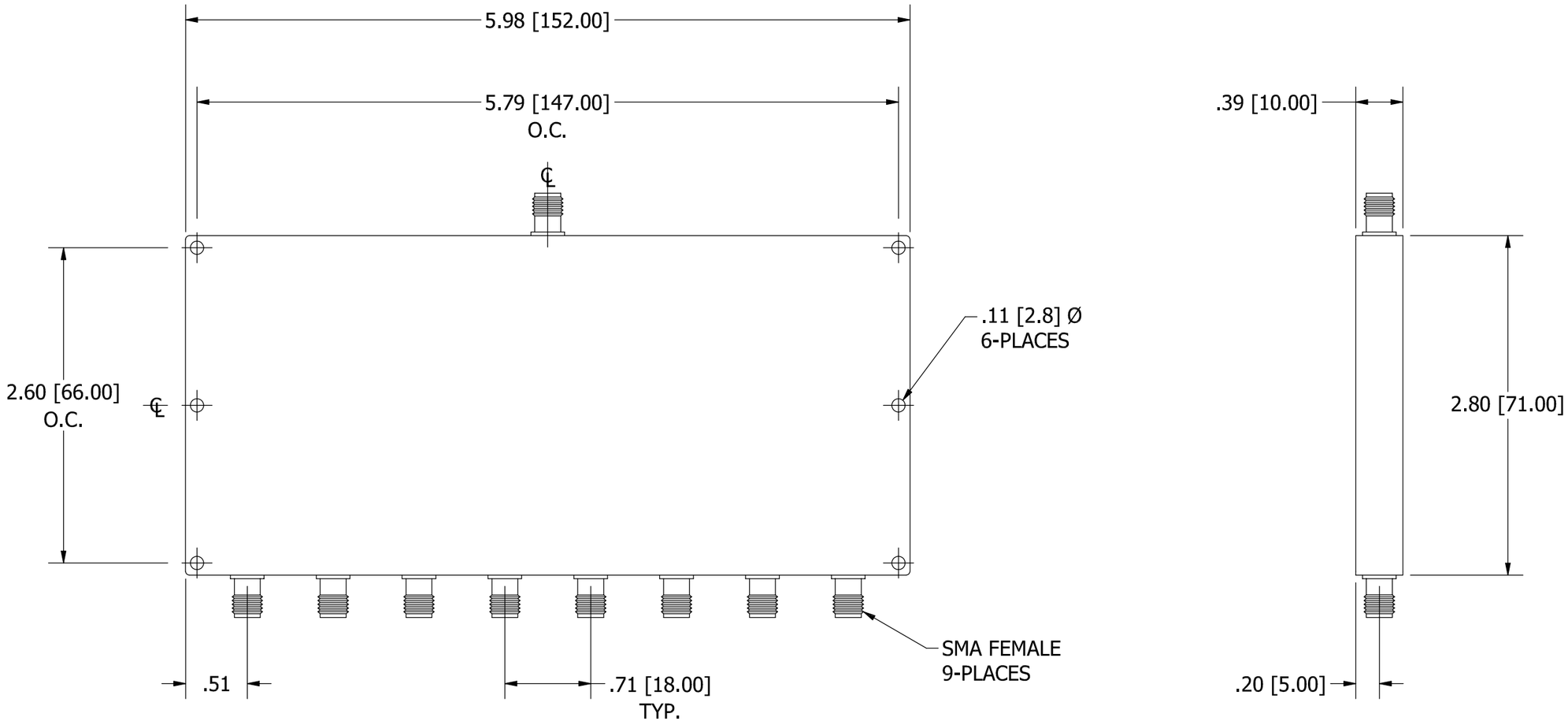

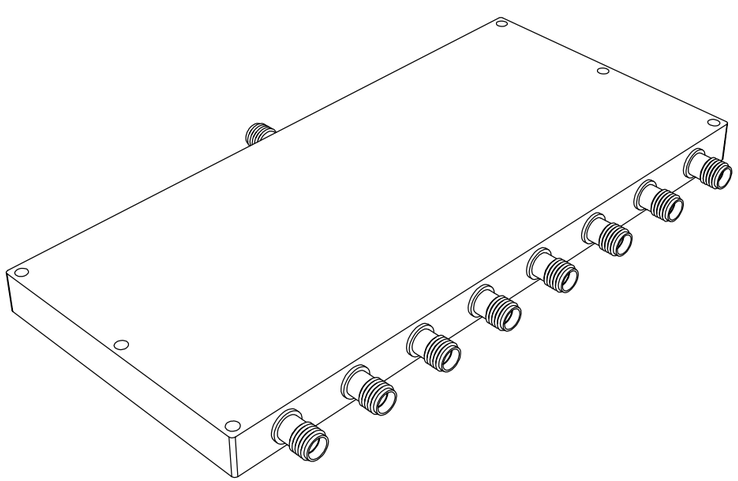

NOTE: DIMENSIONS ARE IN INCHES [MILLIMETERS]

REV	ECN	DATE	BY	APPR
-	ISSUED	5-16-08	BZ	TEZ
A	24444	10-5-15	JZ	TEZ

JFW INDUSTRIES, INC.

www.jfwindustries.com PH: 317-887-1340

MATERIAL: ALUMINUM ALLOY		PROPRIETARY INFORMATION
FINISH: GRAY EPOXY PAINT		ALL SURFACES ARE TO BE FREE OF BURRS, PITS & SCRATCHES
MODEL: 50PD-XXX	SCALE: FULL	TOLERANCES .XX±.010 .XXX±.005 XX°±.5°
DESCRIPTION: 8 WAY POWER DIVIDER / COMBINER		DWG #: 092-5796