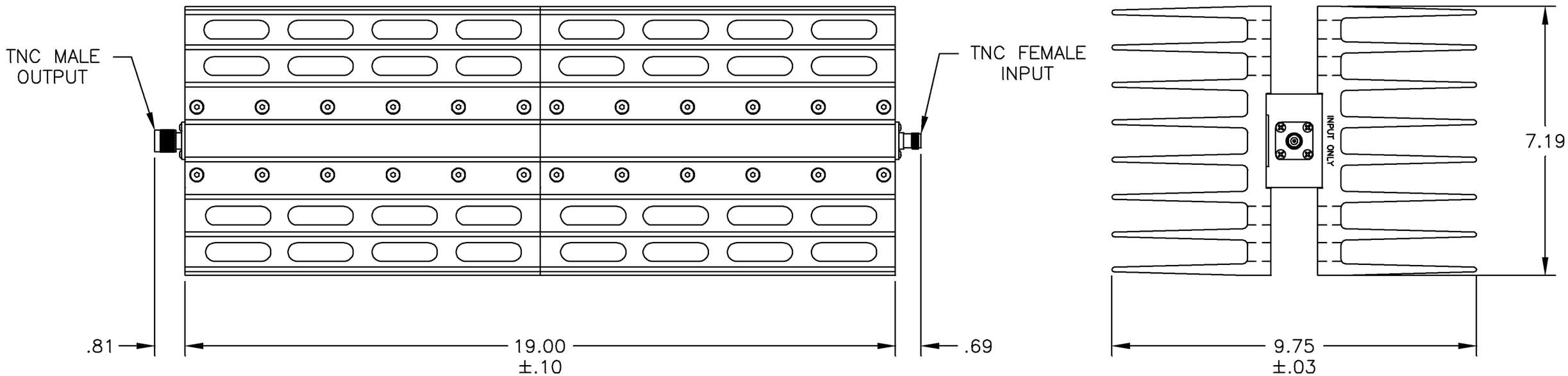

REV	ECN	DATE	BY	APPR
–	ISSUED	2–19–10	TEZ	TEZ

JFW INDUSTRIES, INC.

www.jfwindustries.com PH: 317–887–1340

MATERIAL: ALUMINUM ALLOY		PROPRIETARY INFORMATION
FINISH: CHEMFILM TCP / HEATSINK: BLACK ANODIZE		ALL SURFACES ARE TO BE FREE OF BURRS, PITS, & SCRATCHES
MODEL: 50FHXX–XXX–1000	SCALE: 3/8	TOLERANCES .XX±.010 .XXX±.005 XX°±.5°
DESCRIPTION: 1000 WATT FIXED ATTENUATOR		DWG #: 092–6465