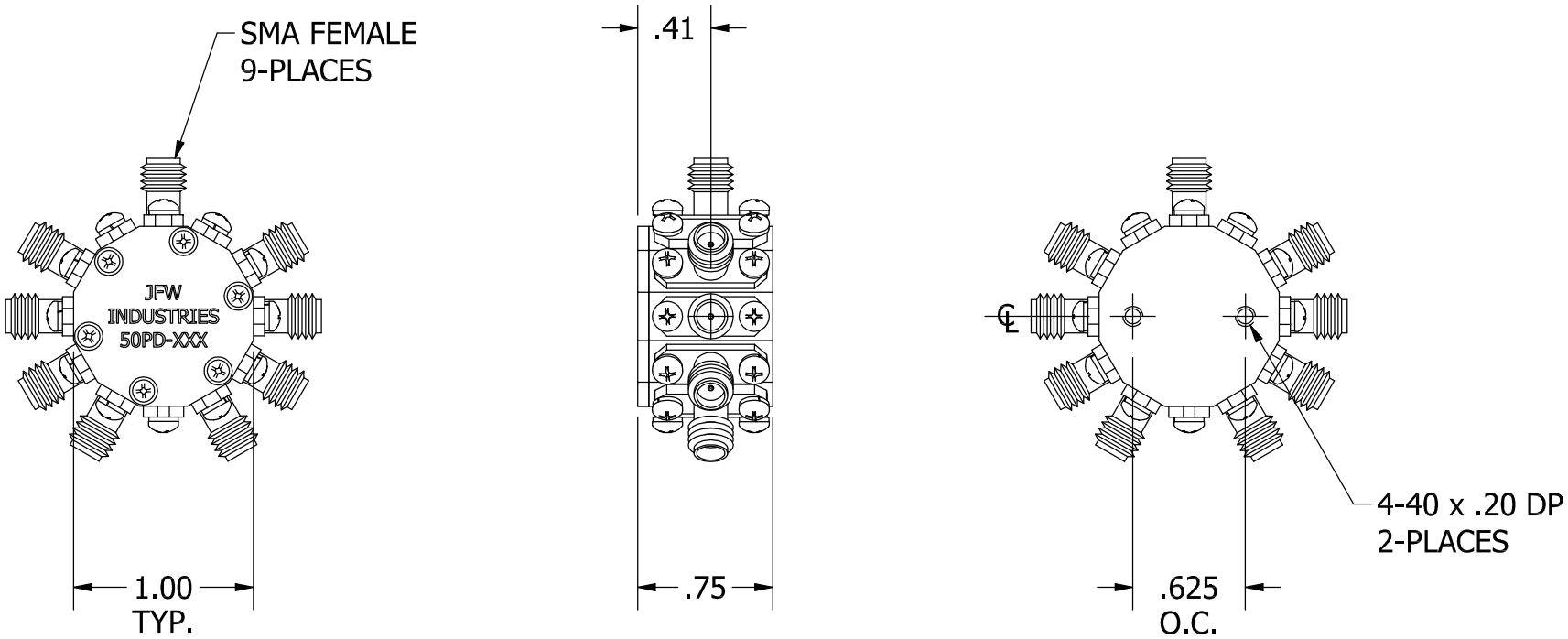

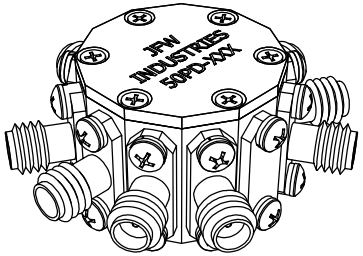

REV	ECN	DATE	BY	APPR
-	ISSUED	10-20-10	DTS	TRS
A	19574	1-4-11	TEZ	TEZ
B	22508	2-12-13	JZ	TEZ
C	24444	9-28-15	JZ	TEZ

JFW INDUSTRIES, INC.

www.jfwindustries.com PH: 317-887-1340

MATERIAL	ALUMINUM ALLOY		PROPRIETARY INFORMATION
FINISH	ELECTROLESS NICKEL		ALL SURFACES ARE TO BE FREE OF BURRS, PITS & SCRATCHES
MODEL	50PD-XXX	SCALE FULL	TOLERANCES .XX±.010 .XXX±.005 XX°±.5°
DESCRIPTION	8 WAY POWER DIVIDER / COMBINER (9 TOTAL PORTS)		DWG # 092-6756