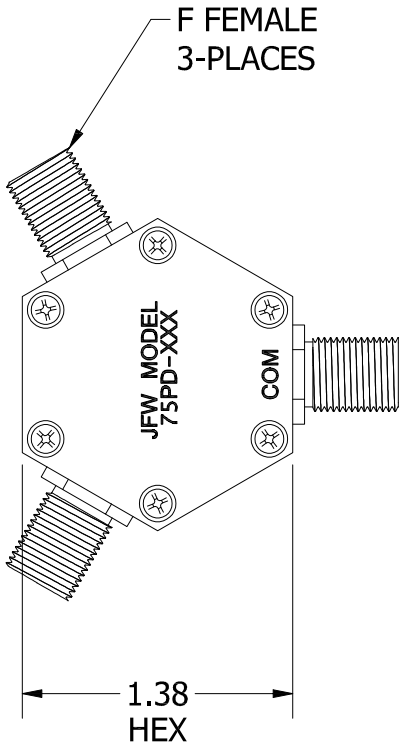

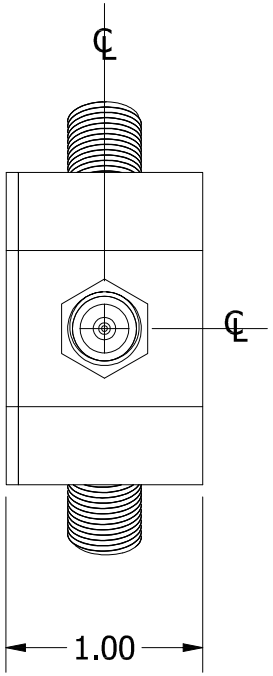

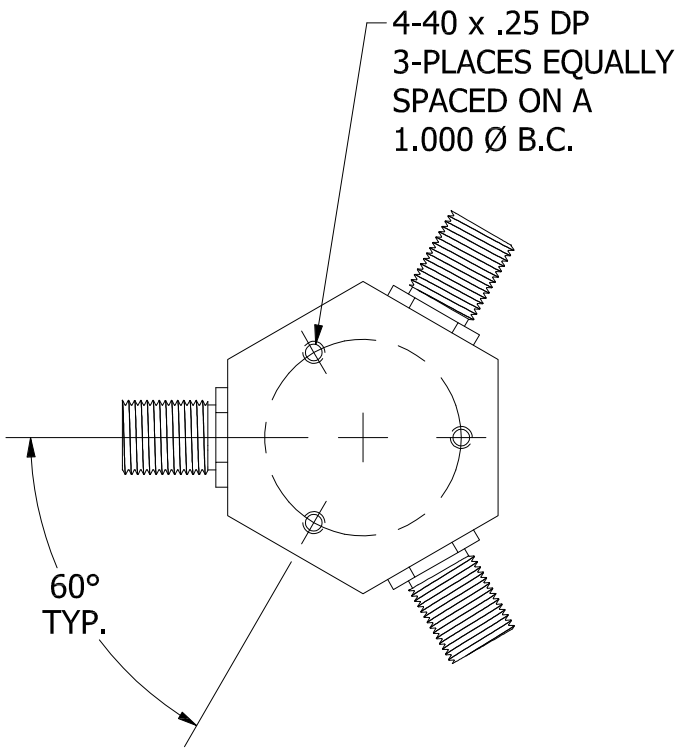

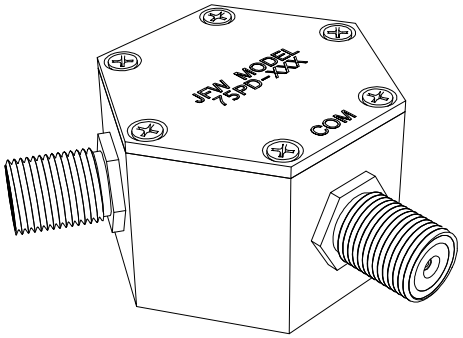

REV	ECN	DATE	BY	APPR
-	ISSUED	1-25-12	JZ	BZ
A	21510	4-26-12	BZ	TEZ
B	24444	10-11-19	GM	TEZ

JFW INDUSTRIES, INC.

www.jfwindustries.com PH: 317-887-1340

MATERIAL	ALUMINUM ALLOY		PROPRIETARY INFORMATION
FINISH	CHEMFILM TCP		ALL SURFACES ARE TO BE FREE OF BURRS, PITS & SCRATCHES
MODEL	XXPD-XXX	SCALE FULL	TOLERANCES .XX±.010 .XXX±.005 XX°±.5°
DESCRIPTION	2 WAY RESISTIVE POWER DIVIDER		DWG # 092-7207-02