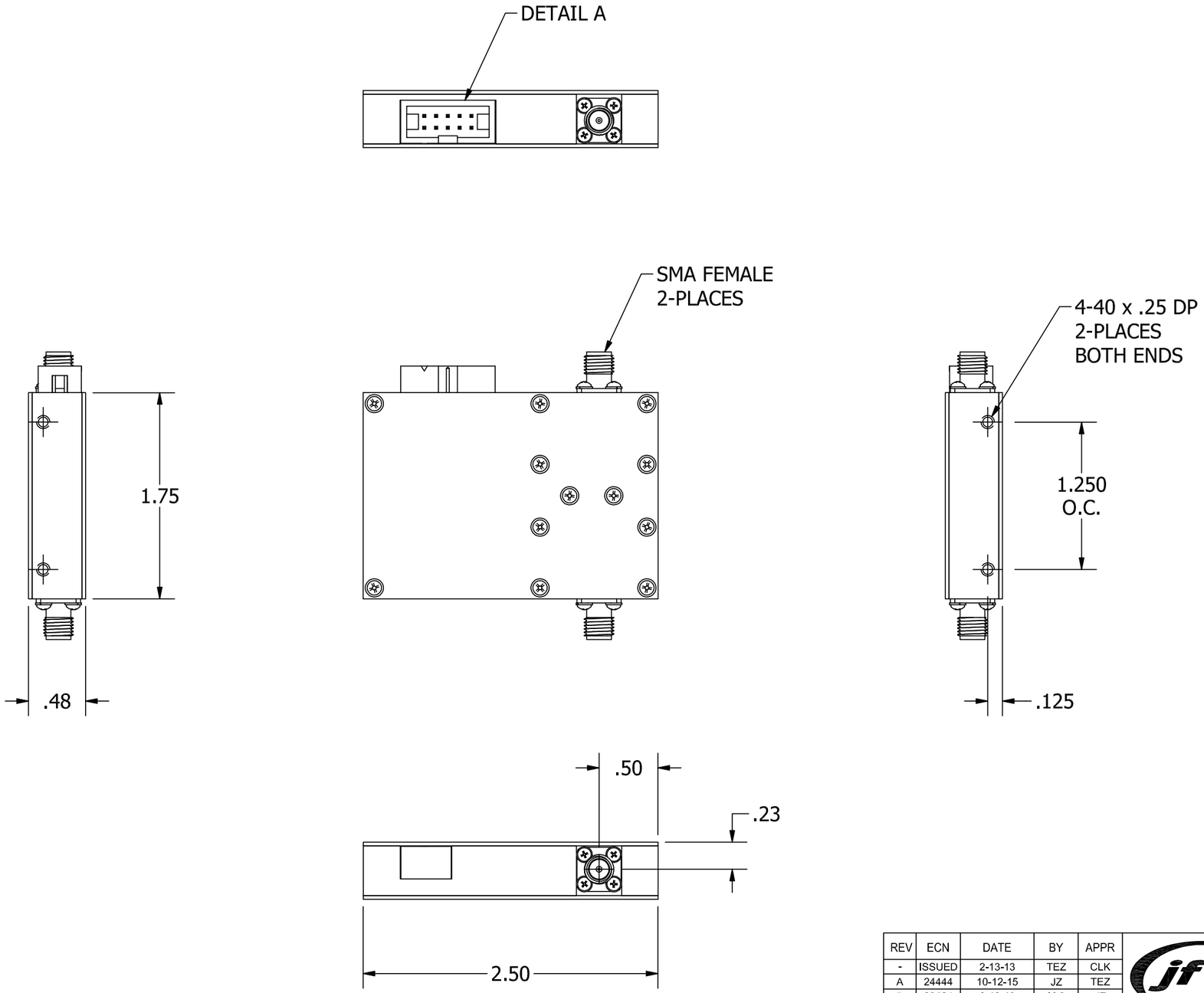

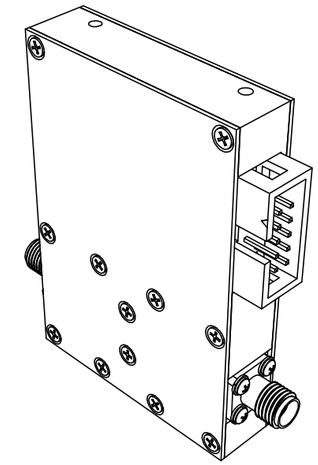

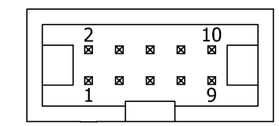

DETAIL A
3M #D2510-6002-AR
OR EQUIVALENT

PIN	FUNCTION
1	.25dB TTL CONT.
2	.5dB TTL CONT.
3	1dB TTL CONT.
4	2dB TTL CONT.
5	4dB TTL CONT.
6	8dB TTL CONT.
7	16dB TTL CONT.
8	NO CONNECTION
9	DC SUPPLY
10	GROUND

REV	ECN	DATE	BY	APPR
-	ISSUED	2-13-13	TEZ	CLK
A	24444	10-12-15	JZ	TEZ
B	29124	6-18-19	ICC	JZ

JFW INDUSTRIES, INC.

www.jfwindustries.com PH: 317-887-1340

MATERIAL: ALUMINUM ALLOY		PROPRIETARY INFORMATION
FINISH: ELECTROLESS NICKEL		ALL SURFACES ARE TO BE FREE OF BURRS, PITS & SCRATCHES
MODEL: 50P-XXXX	SCALE: FULL	TOLERANCES .XX±.010 .XXX±.005 XX°±.5°
DESCRIPTION: PROGRAMMABLE ATTENUATOR		DWG #: 092-7462-15