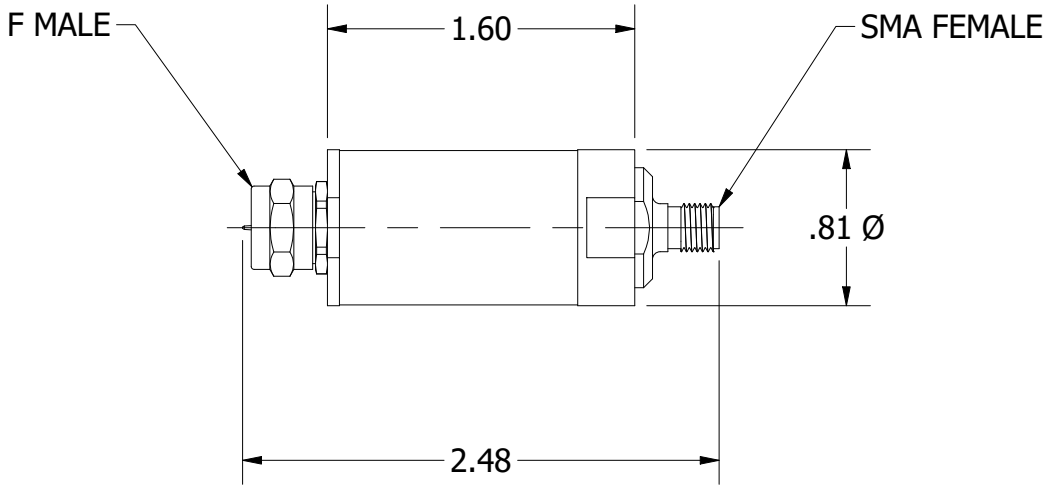

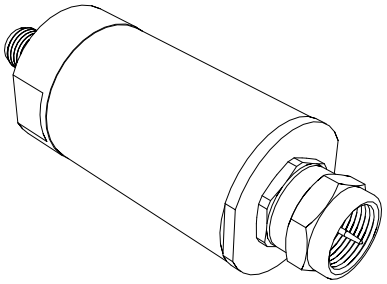

REV	ECN	DATE	BY	APPR
-	ISSUED	12-13-12	JZ	BAC
A	24444	9-23-19	GM	TEZ

JFW INDUSTRIES, INC.

www.jfwindustries.com PH: 317-887-1340

MATERIAL: BRASS		PROPRIETARY INFORMATION
FINISH: NICKEL		ALL SURFACES ARE TO BE FREE OF BURRS, PITS & SCRATCHES
MODEL: 75ZTT-AP	SCALE: FULL	TOLERANCES .XX±.010 .XXX±.005 XX°±.5°
DESCRIPTION: IMPEDANCE MATCHING TRANSFORMER		DWG # 092-7557-01