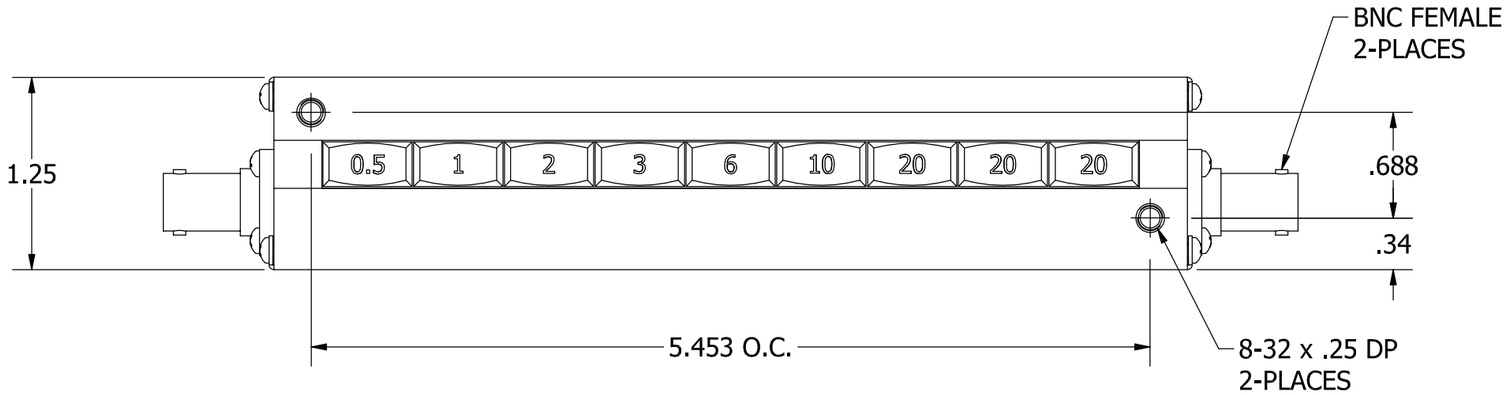

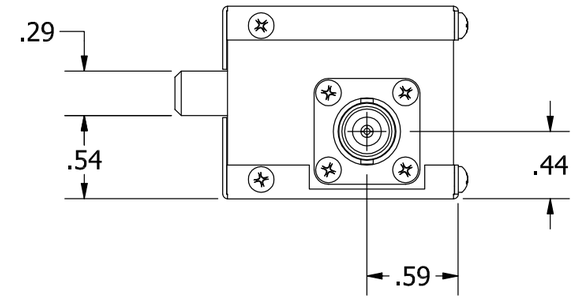

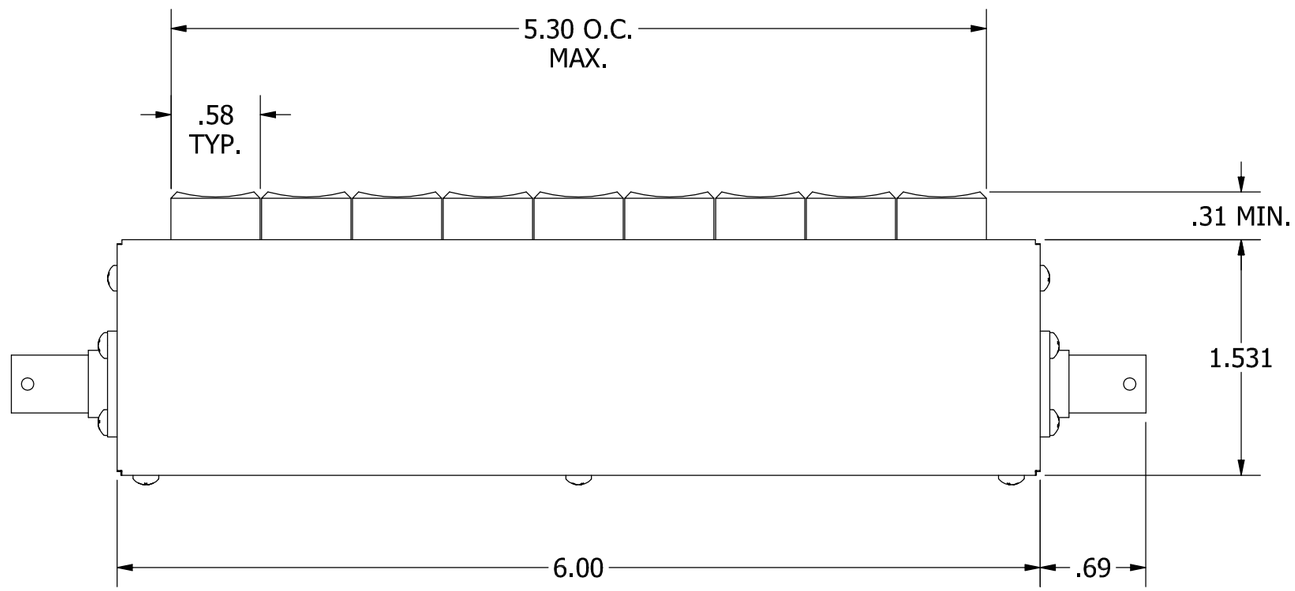

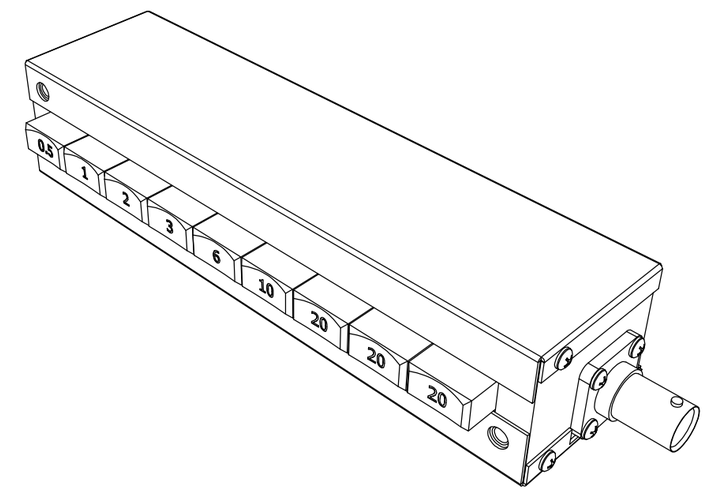

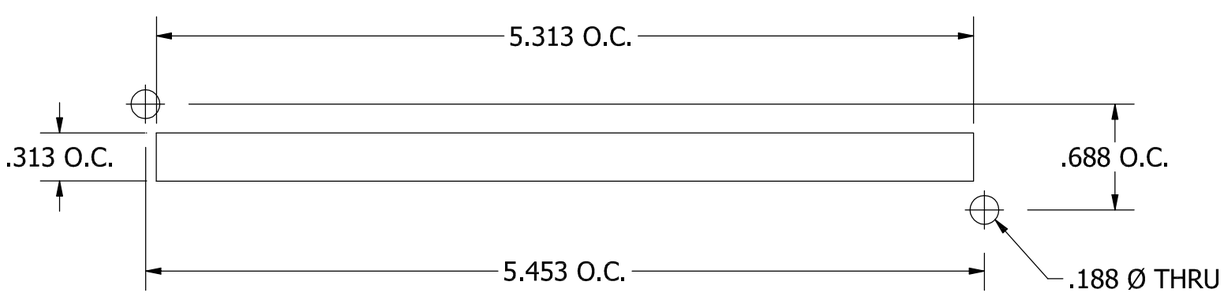

RECOMMENDED MOUNTING HOLE PATTERN

REV	ECN	DATE	BY	APPR
-	ISSUED	12-15-14	TRS	TEZ
A	24444	11-25-15	JZ	TEZ

JFW INDUSTRIES, INC.

www.jfwindustries.com PH: 317-887-1340

MATERIAL: BRASS		PROPRIETARY INFORMATION
FINISH: NICKEL		ALL SURFACES ARE TO BE FREE OF BURRS, PITS & SCRATCHES
MODEL: 50B-XXX	SCALE: FULL	TOLERANCES .XX±.010 .XXX±.005 XX°±.5°
DESCRIPTION: PUSHBUTTON ATTENUATOR		DWG # 092-8198