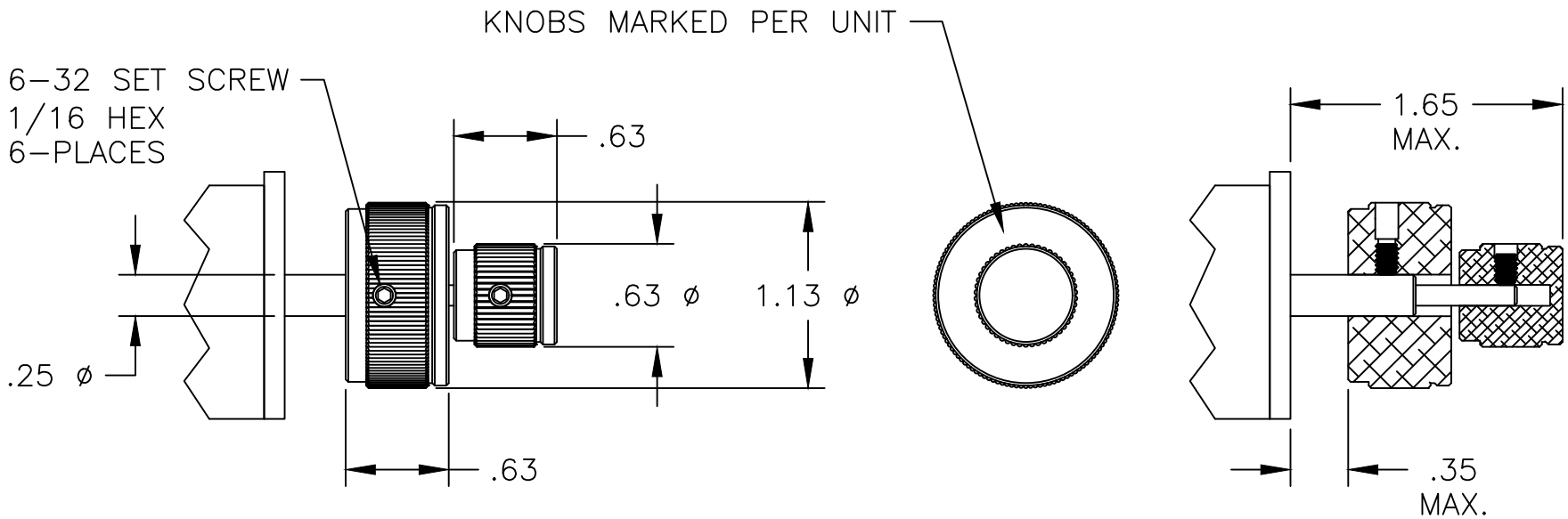

NOTE: PANEL THICKNESS IN ADDITION TO SCREW HEAD MUST NOT EXCEED .35 INCH MAXIMUM.

SET SCREWS FOR SMALL KNOB: 6-32 x 3/16 WITH 1/16 HEX HEAD (JFW #027-318)
SET SCREWS FOR LARGE KNOB: 6-32 x 5/16 WITH 1/16 HEX HEAD (JFW #027-319)

REV	ECN	DATE	BY	APPR
–	ISSUED	9-24-2015	JZ	TEZ
A	28025	8-14-2017	DTS	TRS

JFW INDUSTRIES, INC.
www.jfwindustries.com PH: 317-887-1340

MATERIAL: ALUMINUM ALLOY

PROPRIETARY INFORMATION

FINISH: BLACK ANODIZE

ALL SURFACES ARE TO BE FREE OF BURRS, PITS, & SCRATCHES

MODEL: 132-002 & 132-003

SCALE: FULL

TOLERANCES
.XX±.010 .XXX±.005 XX°±.5°

DESCRIPTION: ROTOR KNOB MOUNTING

DWG #: 092-8435-02