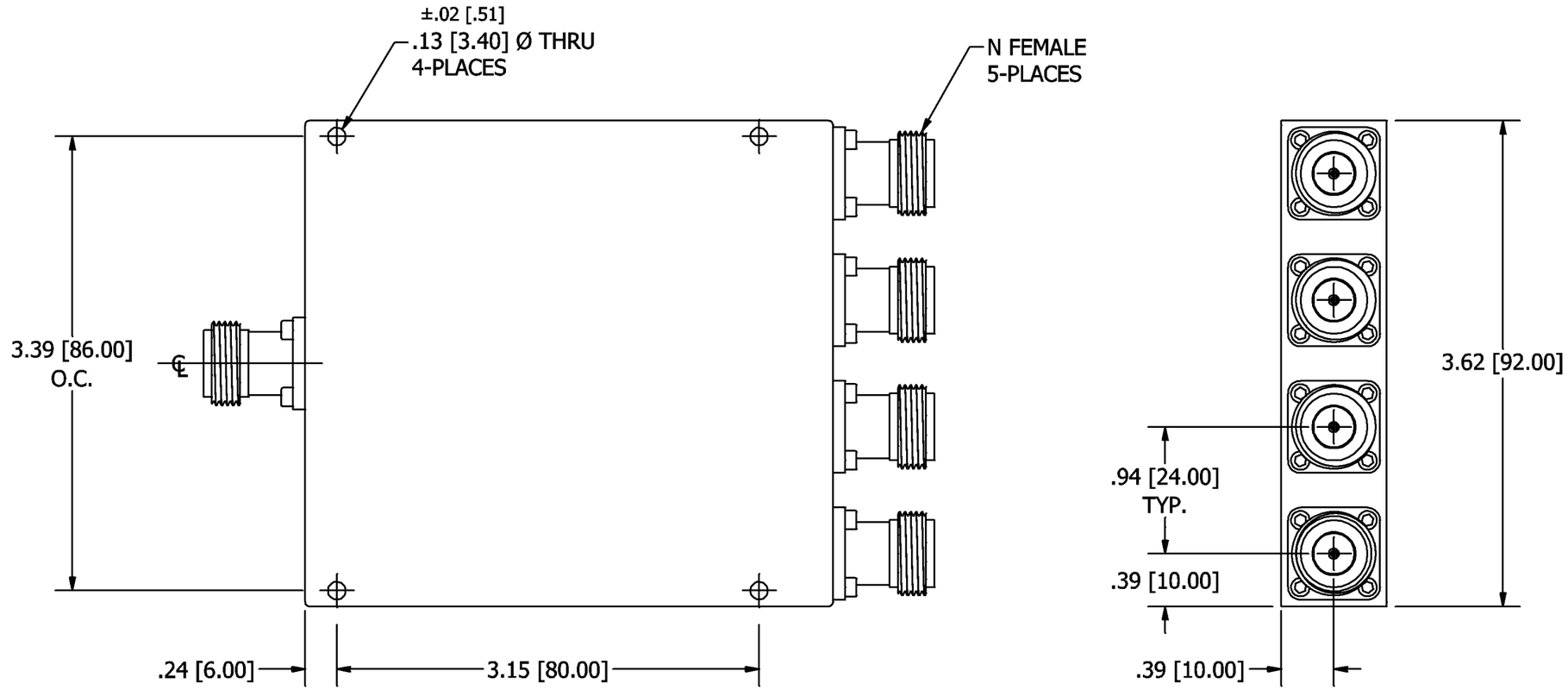

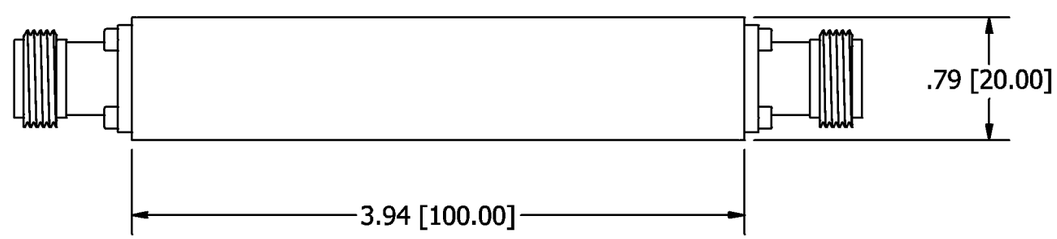

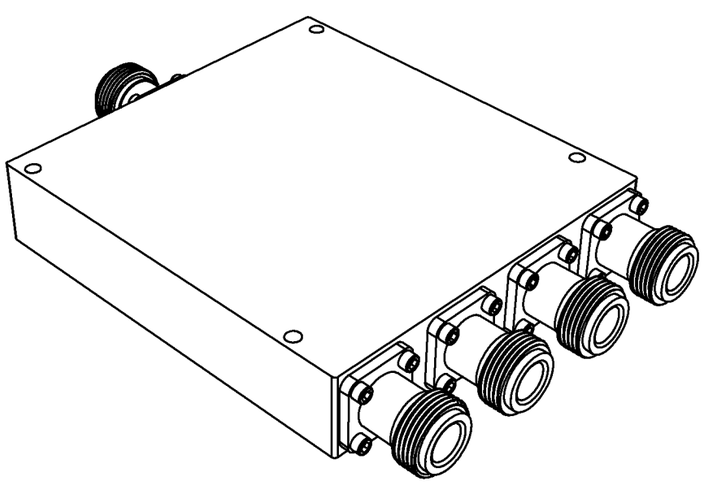

NOTE: DIMENSIONS ARE IN INCHES [MILLIMETERS]

REV	ECN	DATE	BY	APPR
-	ISSUED	4-9-18	JZ	TRS
A	29479	4-26-19	TEZ	TEZ

JFW INDUSTRIES, INC.

www.jfwindustries.com PH: 317-887-1340

MATERIAL	ALUMINUM ALLOY		PROPRIETARY INFORMATION
FINISH	GRAY PAINT		ALL SURFACES ARE TO BE FREE OF BURRS, PITS & SCRATCHES
MODEL	50PD-XXX	SCALE FULL	TOLERANCES .XX±.010 .XXX±.005 XX°±.5°
DESCRIPTION	4 WAY POWER DIVIDER		DWG # 092-9063