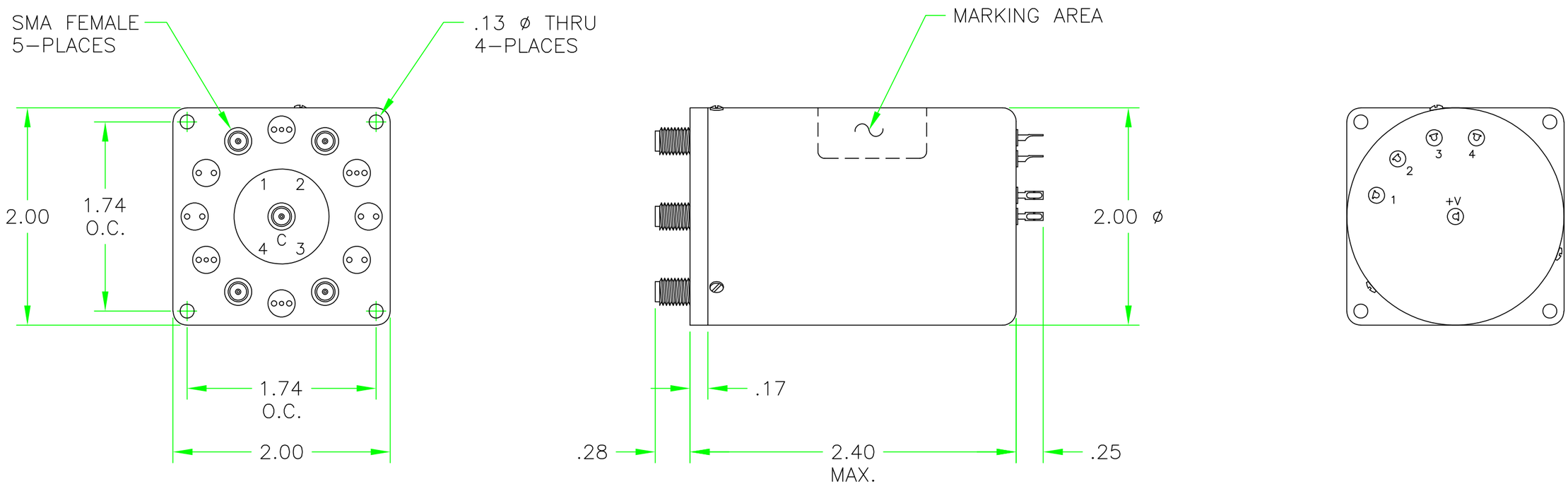

SUPERSEDING TOLERANCES
.XXX ±.01
.XX ±.03

REV	ECN	DATE	BY	APPR
–	ISSUED	12–20–18	JZ	TEZ

JFW INDUSTRIES, INC.

www.jfwindustries.com PH: 317–887–1340

MATERIAL		PROPRIETARY INFORMATION
FINISH		ALL SURFACES ARE TO BE FREE OF BURRS, PITS, & SCRATCHES
MODEL 50S–XXXX	SCALE FULL	TOLERANCES .XX±.010 .XXX±.005 XX°±.5°
DESCRIPTION 1P4T SWITCH		DWG # 092–9240