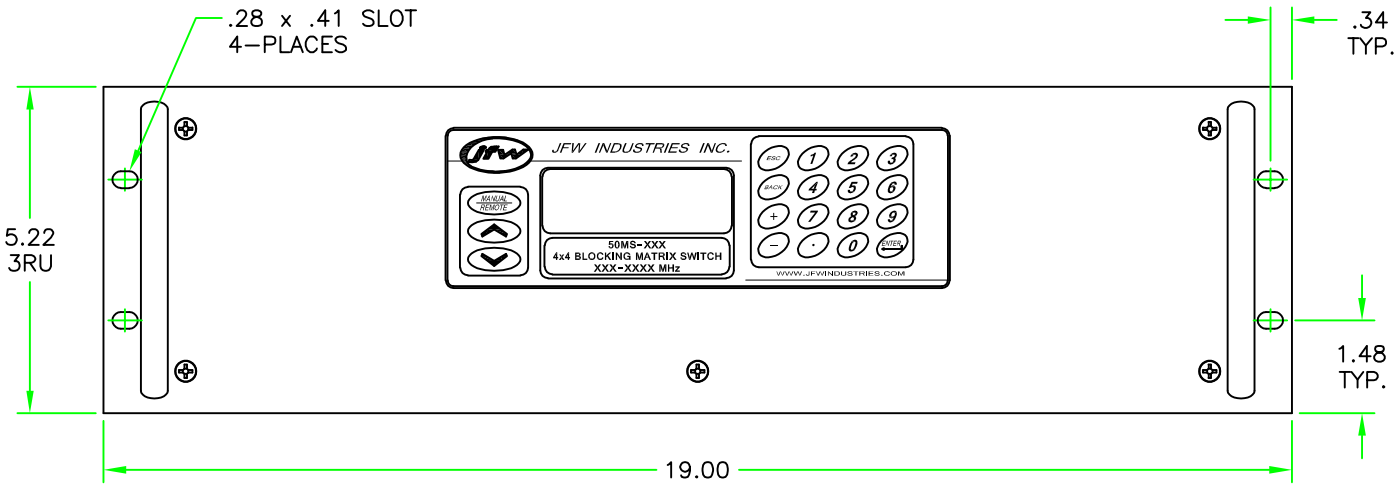

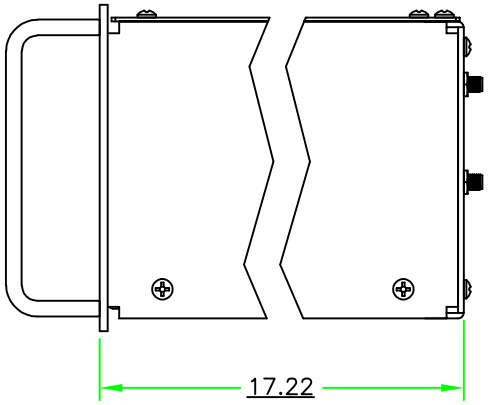

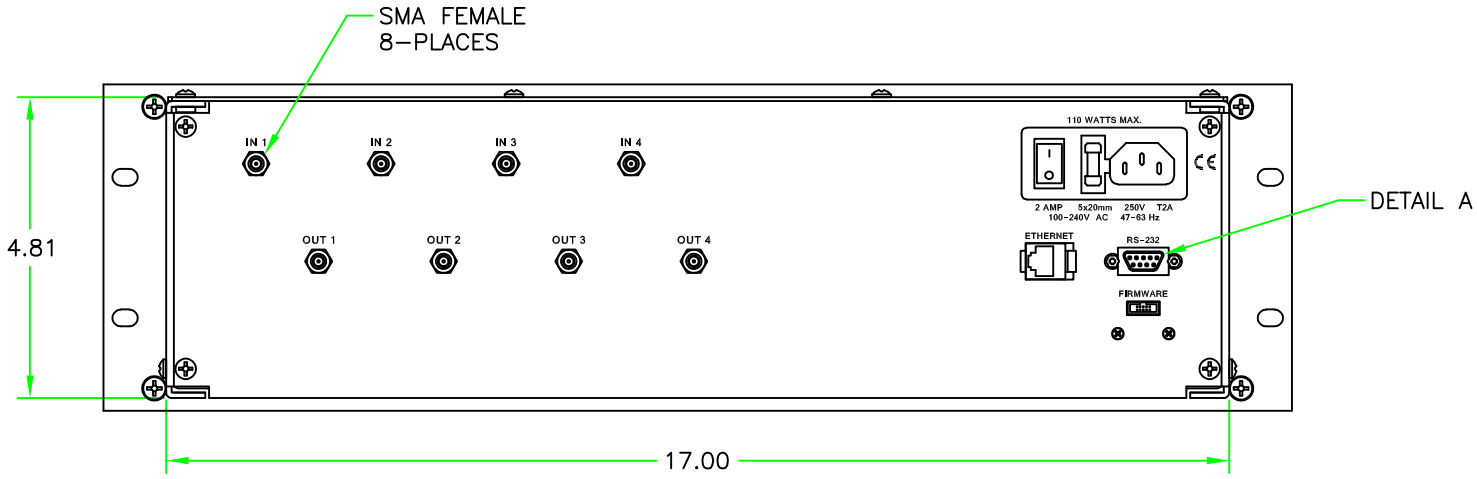

REAR VIEW

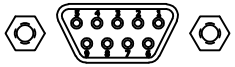

DETAIL A
DE–9S

PIN	FUNCTION
1	CHASSIS GROUND
2	RECEIVED DATA
3	TRANSMITTED DATA
4	NO CONNECTION
5	SIGNAL GROUND
6	NO CONNECTION
7	RTS
8	CTS
9	NO CONNECTION

REV	ECN	DATE	BY	APPR
–	ISSUED	1–9–18	DTS	TRS

JFW INDUSTRIES, INC.
www.jfwindustries.com PH: 317–887–1340

MATERIAL	ALUMINUM ALLOY	PROPRIETARY INFORMATION
FINISH	CHEMFILM TCP / FRONT: BLACK	ALL SURFACES ARE TO BE FREE OF BURRS, PITS, & SCRATCHES
MODEL	50MS–XXX	SCALE 1/2
DESCRIPTION	4x4 MATRIX SWITCH	TOLERANCES .XX±.010 .XXX±.005 XX°±.5°
		DWG # 092–9243