JFW MODEL
115-020

IMPEDANCE
50 Ohms nominal

FREQUENCY RANGE
DC-26.5 GHz

VSWR
1.25:1 maximum
1.05:1 typical @ 8 GHz
1.08:1 typical @ 18 GHz
1.18:1 typical @ 26.5 GHz

Connector Body
Passivated Stainless Steel

Connector Pins
Gold plated

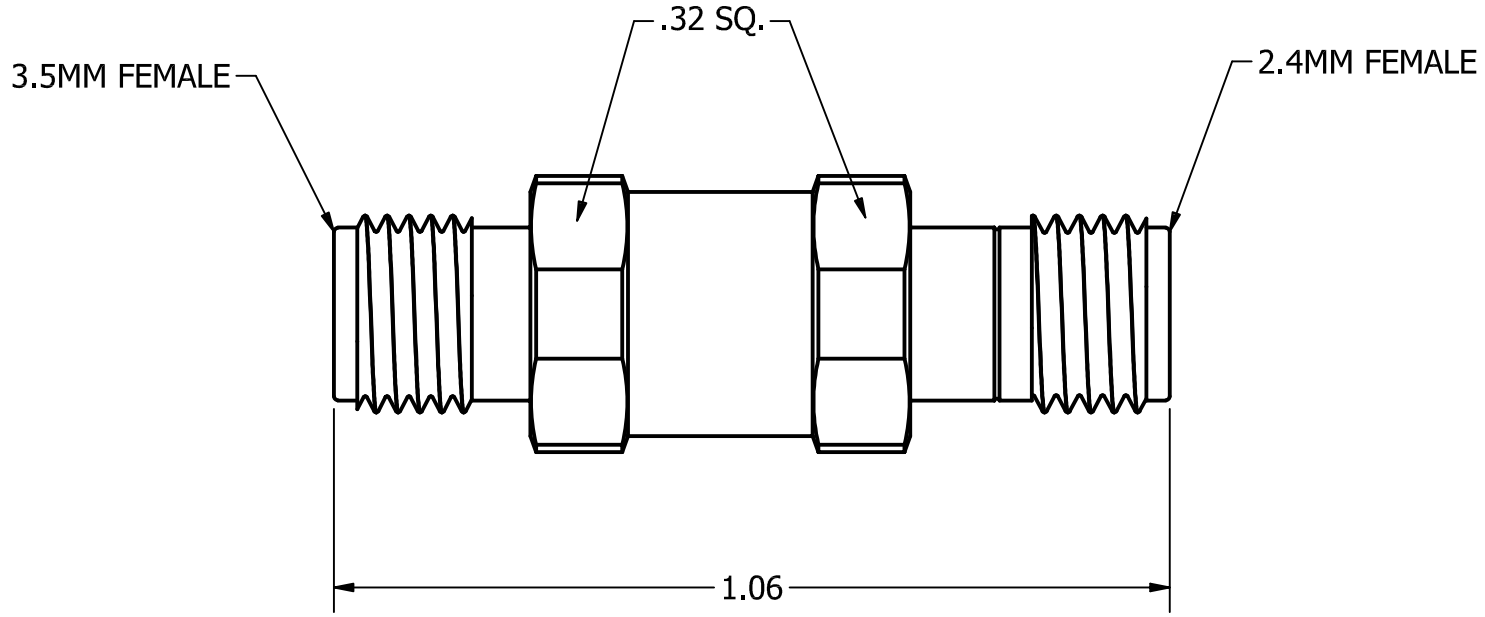

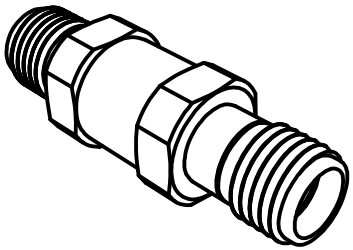

REV	ECN	DATE	BY	APPR
-	ISSUED	2-7-2024	GM	JZ
A	33336	4-25-2024	DTS	TRS

JFW INDUSTRIES, INC.
www.jfwindustries.com PH: 317-887-1340

MATERIAL	STAINLESS STEEL		PROPRIETARY INFORMATION
FINISH	PASSIVATED		ALL SURFACES ARE TO BE FREE OF BURRS, PITS & SCRATCHES
MODEL	115-020	SCALE x4	TOLERANCES .XX±.010 .XXX±.005 XX°±.5°
DESCRIPTION	RF ADAPTER 2.4mm FEMALE/3.5mm FEMALE		DWG # 115-020